Oil Electro-mechanical Valves Hazardous Locations

1-1/4” Series 4760NI
Position “L”, with socket welded nipples and flanges

- **Electrically actuated valves shut off oil lines** in less than one second.
- **Application flexibility provided** with 1" through 1-1/4" diameter line sizes
- **All Maxon top assembly enclosures meet approval sanctions:** NEMA 1, 3, 3S, 4, and 12; Available with NEMA 4X trim (optional)
- “NI” valves are FM approved for hazardous locations: Class I, Division 2, Groups A, B, C, and D; Class II, Division 2, Groups F and G; Class III, Division 2; Temp Code T5 (AC) or T3C (DC)
- **Sanctioned service valve approvals:** FM (Factory Mutual) and CSA (Canadian Standards Association) sanctioned
- **Handles flowing fluid temperatures:** Swinging gate bodies from -20°F (-28°C) to +250°F (+121°C); Any ambient temperature from -20°F (-28°C) to +140°F (+60°C)
- **Valve bodies designed to ANSI** (American National Standards Institute) standards. ISO (International Standards Organization) standards also available.
- **Various application requirements met** with manual reset or automatic reset motorized operators.

- **Minimize line pressure drops** with straight-through flow swinging gate valve bodies.
- Minimal field maintenance required.
- **Positive visual indication of valve body position** is provided by large two-color open-shut indicator.
- **Bodies built for heavy duty industrial service** of one-piece cast iron or cast steel.
- **Installation piping convenience obtained** from field rotatable top assemblies.
- **Special operating features** available in Special Service Packaged versions.
- **Micro-lapped seating** wears in, not out.
- **Positive indication of valve body position provided through:** Auxiliary SPDT signal switches mounted inside valve top enclosure; Proof-of-open and/or Proof-of-closed position switches.
- **Built-in over travel valve body design** meets requirements of insurance standards.
- **External junction box requirement eliminated** with built-in valve wiring compartment and electrical terminal block.
- **Manual reset valves may be mounted in overhead lines** with use of wheel and chain option.
- **Companion flange sets available** to simplify installation.

Design features and operating concepts

Normally closed shut-off valves are used in burner system fuel supply lines on industrial boilers, furnaces, ovens, kilns, and other heating processes. All valves are designed to shut off fuel automatically and instantly with an interruption in the electric power supplied through your safety circuit.

These valves are also used for the **manual** or **motorized** opening or closing of pipe lines carrying liquids commonly used in industrial processes. Normally closed valves cannot be opened until the interlocking safety control circuit is proven and resulting electrical power is supplied to the shut-off valve.

Motorized automatic valve actuators are used where remote access or unmanned applications are needed.

NOTE: Valve motors and solenoids are protected against thermal overload. If the valve duty cycle is exceeded, the motor and/or solenoid must be allowed to cool before the internal thermal protection will automatically reset.

Manual reset actuators require operating personnel to be physically present to actuate the valve from its at rest position.

All Maxon valves feature one-piece cast iron or cast steel bodies with micro-lapped seats and discs. Straight-through flow path minimizes pressure drop through full open swinging gate bodies.

Valve body design details

Swinging gate bodies are frequently used in normally closed oil valves. The hard faced micro-lapped seat nut is threaded into the one-piece valve body. The free-floating, hard faced, spring loaded circular disc swings across the seat. Line pressure also assists in sealing the disc to the downstream seat.

Frequent use and cycling actually helps to keep your valve clean. Since the free-floating disc is swinging across the circular seat nut on the arc created by the disc carrier, the disc rotates slightly on every cycle. This provides a fresh, clean surface area for sealing off the flow lines.

Maxon valve bodies have special service trim options available to meet your particular fluid service requirements. Contact your Maxon representative for details.

Valve body capacities and specifications

Body material	End connections	Pipe size (in inches)	Cv factor
Gray iron	Threaded	1	12
		1-1/4	17
Cast steel	Threaded or Flanged	1	12
		1-1/4	17
			45

Each complete valve assembly must include one of these valve bodies, regardless of ultimate series designation.

Flows through the valve body and resulting pressure drops may be estimated by inserting your specific conditions into the following formula and using Cv flow factors given for each valve body.

$$V = (Cv) \times \left(\sqrt{\frac{P_1 - P_2}{G_1}} \right)$$

Where:

G_1 = Specific gravity @ flowing temperature °F

P_1 = Inlet pressure PSIA (14.7 psi + psi gauge)

P_2 = Outlet pressure PSIA (14.7 psi + psi gauge)

V = Flow in U.S. gallons/minute of water

Valve body capacities with #2 oil

To select a valve for your application, use either Cv factor calculations or this graph showing approximate pressure drop at various flows of #2 oil.

Typically, pressure drop for fuel flows should not exceed 10% of inlet pressure.

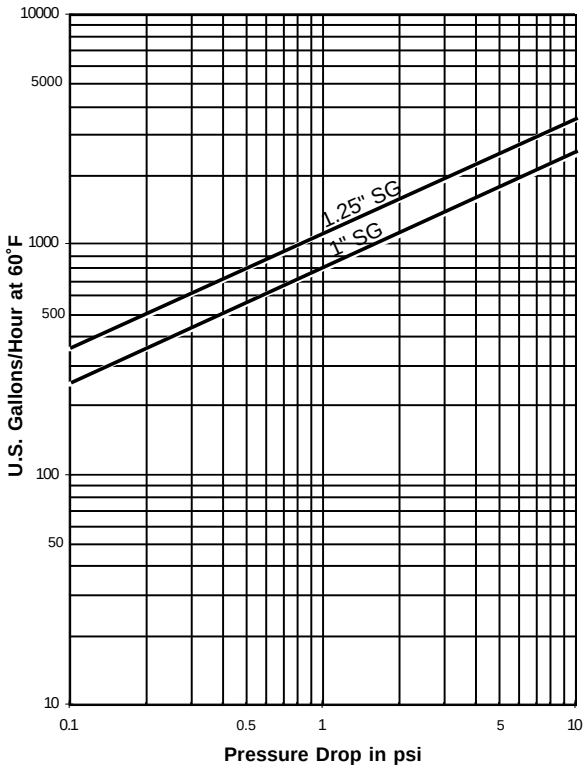

For preheated #5 or #6 oil, multiply the required flow rate in GPH by the factor given in the table below, then select a valve based upon that equivalent flow of #2 oil and the allowable drop.

Oil grade	#5		#6				
°F @ inlet	125	160	120	140	180	210	220
Factor	1.43	1.11	2.86	2.0	1.25	1.11	1.05

For example: To size for 5 PSIG drop with a 3500 GPH flow of #6 oil preheated to 140°F, the multiplier is 2. Equivalent flow of #2 oil is then 3500 x 2, or 7000 GPH. Chart shows that a 5 PSIG drop will require use of a valve body having a Cv factor of at least 45.

Selection data

Series designation

Body material >	Gray iron	Cast steel
Top assembly function	Sanctioned service [1]	Sanctioned service [1]
Manual reset	730NI	760NI
Automatic reset	4730NI	4760NI

[1] Sanctioned series are sold for fuel oils and carry FM and CSA sanctions. Other liquids may be sanctioned. Contact Maxon with your fuel analysis.

Temperature limits

All of these valves can handle fluid temperatures from -20°F (-28°C) to +250°F (+121°C).

Ambient temperature limits vary. The valves on this page handle ambient temperatures from -20°F (-28°C) to +140°F (+60°C).

Operation

All electro-mechanical valves require a constant supply of electrical energy to their holding solenoids inside the top assembly actuators. Once the solenoid is energized, the 730NI and 760NI valves may be opened manually, or the 4730NI and 4760NI valves will automatically open. Any interruption of the electrical power to either of these valves causes an immediate trip of the valve to its normally-closed position.

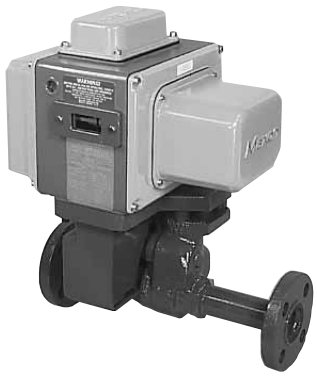

1.25” Series 4760NI

Available sizes and pressure ratings

Pipe size (inches)	Body Cv flow factor	Maximum inlet pressure (PSIG) [1]			
		Gray iron bodies		Cast steel bodies	
		Fuel oils	Special service	Fuel oils	Special service
1	12	250	250	250	250
1.25	17	250	250	250	250
1.25 HC	45	---	---	125	125

[1] Maximum operating pressure differential (MOPD) in psi must not exceed maximum inlet pressure shown

Swinging gate body/trim specifications

Trim identification of Maxon Swinging Gate Shut-Off Valves is two-part. The first digit before the hyphen is a number (1, 2, 3 or 4) identifying body material as shown in Table 1 below. The second digit after the hyphen identifies a trim utilizing the materials indicated in Table 2 below.

Standard sanctioned valves incorporating a *cast iron body* will normally be identified by trim 1-B or 1-D. Sanctioned valves with *steel body* will normally be trim 2-D.

Non-sanctioned services or unusual applications may require upgrading of internal trim. Contact Maxon with specific fuel analysis for price and availability.

The drawing shown on the following page carries item numbers matching those in Table 2. This information is furnished for identification only, not for ordering parts.

Table 1: Body (item 1) specifications

Body description	Body 1-	Body 2-	Body 3-	Body 4-
Material	Cast iron, Class B	Cast steel	Cast iron, Class B	Cast steel
ASTM spec	ASTM A126	ASTM A216-WCB	ASTM A126	ASTM A216-WCB
Special coating	---	---	Electroless nickel-coated	Electroless nickel-coated

Table 2: Internal trim material specifications

Item no.	Part description	For 1” & 1-1/4” valves	
		Trim: -B	Trim: -D
2	Hex nut or renewable seat	Cast iron with #420 stainless steel seat ring	Hard-faced steel
3	Stem bushing	Zinc-plated steel	Zinc-plated steel
4	Stem	#416 stainless steel	#416 stainless steel
5	Stem spring	#302 stainless steel	#302 stainless steel
6	Disc carrier	Steel	Steel
7	Disc	Nodular iron	Hard-faced steel
8	Stem o-rings	Viton	Viton
9	Disc spring	#302 stainless steel	#302 stainless steel
10	Inner stem thrust ring	Teflon	Teflon
11	Back-up o-rings	Teflon	Teflon
12	Body gaskets	Soft iron	Soft iron
13	Stem bushing gasket	Soft iron	Soft iron
14	Body o-ring	Viton	Viton

Typical construction of 1” and 1.25” screwed body valves

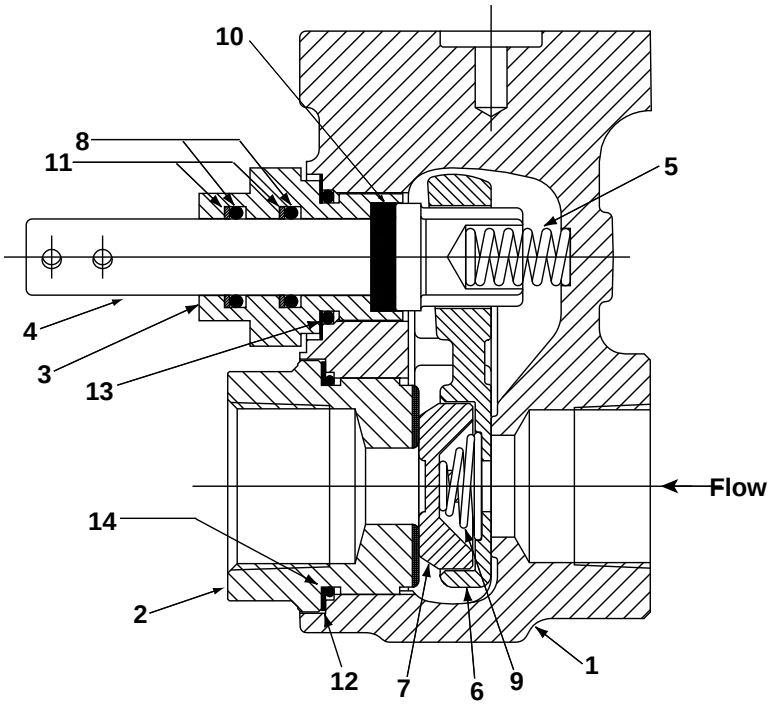

Component identification

All safety devices should be tested at least monthly* and more often if deemed advisable. Periodic testing for tightness of manual or motorized shut-off valve closure is equally essential.

per NFPA 86-Appendix B-4 (1995)

These Maxon valves are designed for long, trouble-free service. Only items shown as suggested spare parts are considered field replaceable.

WARNING: Do not attempt field repair of valve body, top assembly or motor drive unit. Any alterations void all warranties.

To determine suggested spare parts, identify series designation and serial number from the valve's nameplate.

To order, specify:
1. Quantity
2. Assembly part number (if available)
3. Description
4. Electrical specification
5. Full nameplate information (from existing valve)

Nameplate (typical)
(shown for listed valves; others similar)
Nameplate designation does not reflect external accessory items or motor limit switch

Normally-closed valve designation				
Valve size (NPT)	Valve series	Steel body (if used)	DC solenoid (If used)	VCS used*
1	4730NI	S	D	1

*Signal switch legend:
0 = No switch
1 = VCS-1 switch
2 = VCS-2 Switch

Electrical data

General

All Maxon shut-off valves are electrically actuated from a power source, normally through the flame safeguard and/or safety control circuits.

Standard valve assemblies include an internal holding solenoid for 115 volt 50/60 hertz AC power. (230 volt 50/60 hertz available upon request.)

The solenoid is energized whenever the valve is powered. The motor operator on automatic reset versions is powered only during the opening stroke.

Switch wiring diagram (reproduced below) is part of each valve assembly, summarizing electrical data and a full complement of optional signal switches.

Diagram shows valve in its normally closed (at rest) position. The indicated internal wiring is present only when the appropriate auxiliary switches are specified. Automatic reset valves always include a VOS-1 SPDT valve open motor limit switch.

Good practice *normally* dictates that auxiliary switches in valves used for safety shut-off functions should be used for signal duty **only**, not to operate additional safety devices.

Signal switch designations:

VCS (Valve Closed Switch) is actuated at the end of the closing stroke. VCS-1 is SPDT; VCS-2 is 2 SPDT switches mounted side by side.

VOS (Valve Open Switch) is actuated at the end of the opening stroke. VOS-1 is SPDT; VOS-2 is 2 SPDT switches mounted side by side.

Switch amp ratings are shown on the schematic wiring diagram below.

DO NOT EXCEED rated amperage or total load shown.

Volt ampere (VA) ratings: manual reset			
Valve		AC operation 50 Hz / 60 Hz	
Size	Series	Opening	Holding
1” - 1.25”	730NI (-S), 760NI	24/15	24/15

Volt ampere (VA) ratings: automatic reset			
Valve		AC operation 50 Hz / 60 Hz	
Size	Series	Opening	Holding
1” - 1.25”	4730NI (-S), 4760NI	344/213	24/15

NOTE: Total VA of solenoid (manual reset valves) or solenoid and motor (motorized valves) must not exceed the limits shown.

Manual reset series:
1” - 1.25” Series 730NI, 760NI

Automatic reset series:
1” - 1.25” Series 4730NI, 4760NI (-S)

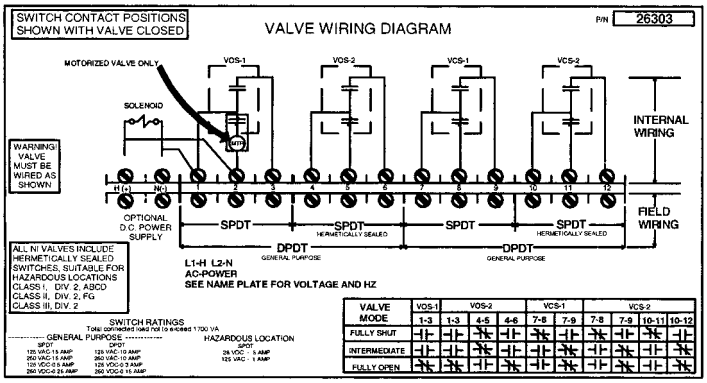

Dimensions

1” and 1.25” valves with swinging gate bodies

Series 730NI, 760NI

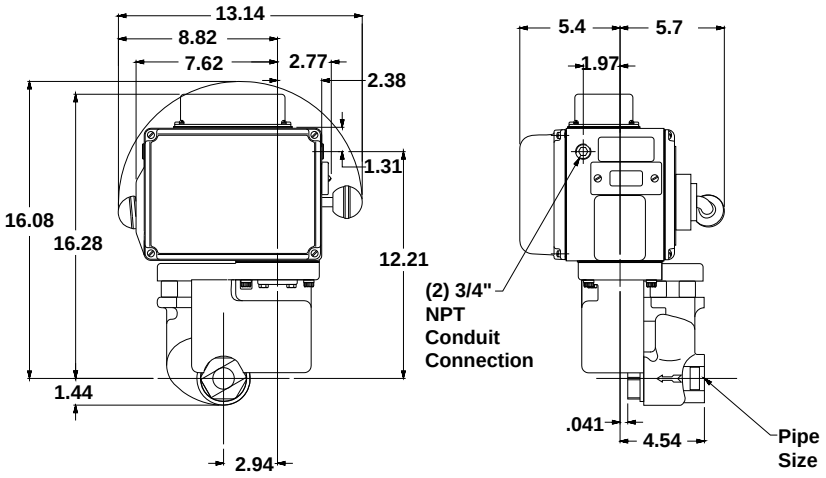

Series 4730NI, 4760NI

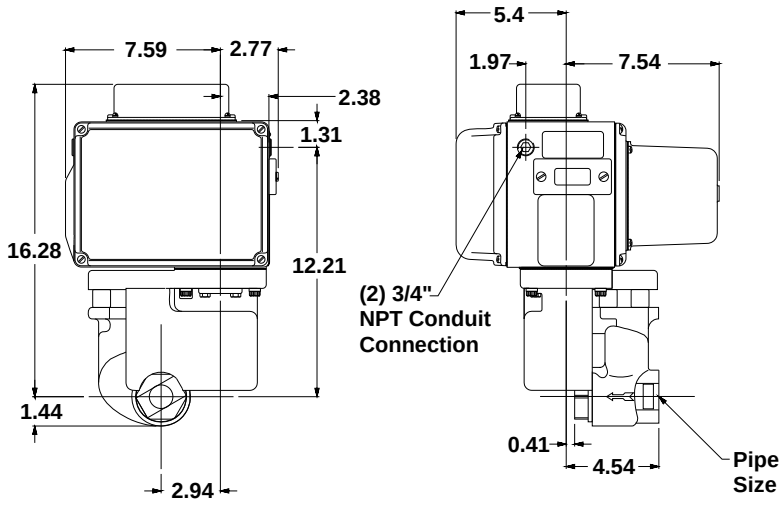

NOTE: 2.75” needed for terminal block cover removal

Available top assembly positions

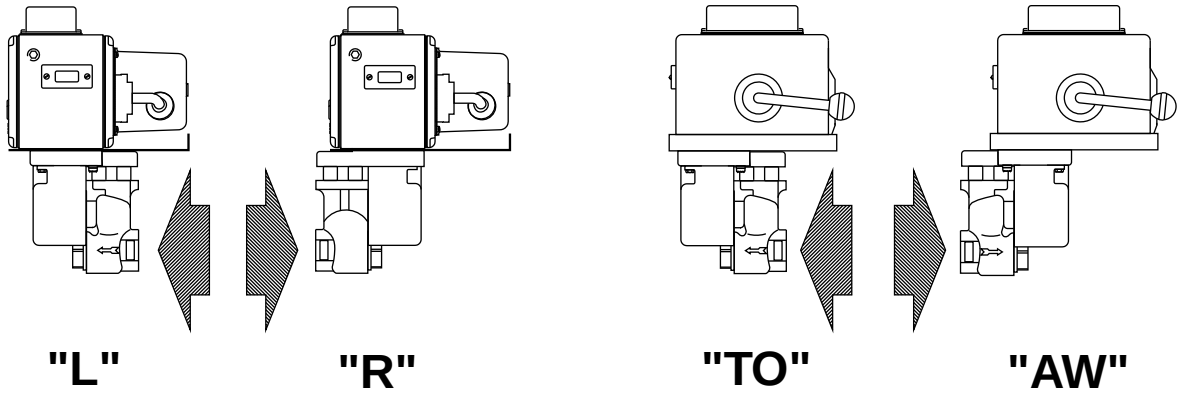

Auxiliary signal switches

All Maxon NI Valves may be equipped with internally-mounted hermetically-sealed signal switch(es) to provide a proof-of-open or proof-of-closure valve position indication. Auxiliary signal switches indicate when valve is open or closed and are normally connected electrically into your control panel lights or warning device circuit(s).

VCS hermetically-sealed (Valve Closed Switch) is actuated when valve is fully shut. It is the upper, inverted snap-switch mounted on rear of switch bracket. VCS-1 is an SPDT (single-pole, double-throw) switch. VCS-2 is (2) SPDT switches mounted side by side. All contacts are available for external circuitry.

VOS hermetically-sealed (Valve Open Switch) is actuated when valve reaches full-open. It is the lower snap-switch mounted on front of switch bracket. VOS-1 is an SPDT switch. On automatic reset valves, its normally closed contact serves as a motor limit switch and is not available for external circuitry. On manual reset valves, normally closed contact is available for external circuitry. VOS-2 is (2) SPDT switches mounted side by side, used in lieu of VOS-1 for additional contacts.

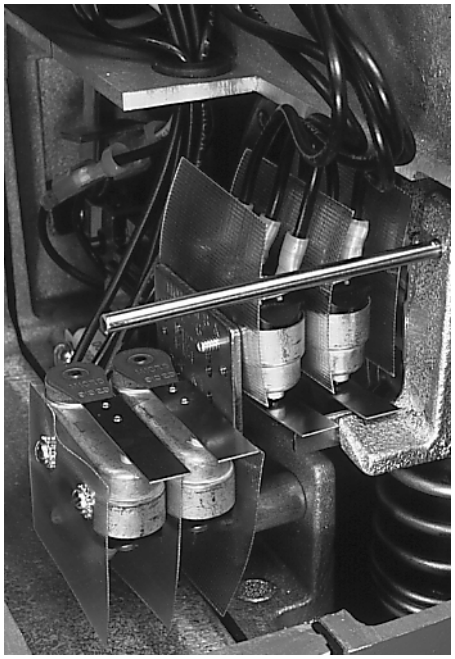

Valve shut

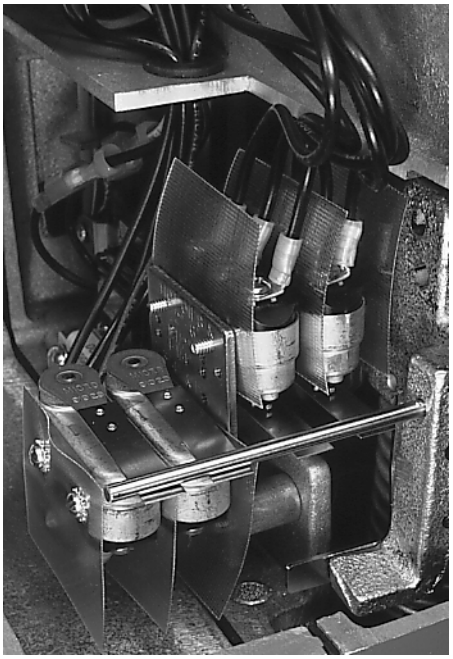

Valve open

Photos above of normally-closed valve
(typical for Series 730NI (-S), 760NI, 4730NI (-S), 4760NI)

Tandem arrangements (for simultaneous opening of main and blocking valves)

General

Wherever insurance underwriters or other regulatory groups require the use of a double-valve or "block-and-bleed" system, but manual operation is preferred to the use of automatic reset valves, operation can be simplified by adding a tandem arrangement to a pair of Maxon manual reset shut-off valves.

A linkage overtravel spring in the tandem arrangement latches the blocking valve just before the main valve is latched, assuring latching of both valves.

If it is necessary to locate a tandem valve above arms reach, an overhead wheel and chain assembly may be added which includes a loop of chain accessible to operating personnel.

To order

Valves are to be specified in the usual manner and must be in top assembly position TO or AW.

VOS and VCS switches must be included on the main valve and a VOS switch on the blocking valve to permit electrical connection as shown in the wiring schematic illustrated below.

If overhead wheel and chain assembly is also required, specify loop length to reach appropriate operating position. Extra chain (in one foot increments) may be specified.

Center line distance between valves must be within the ranges indicated in Table 1 and shown in sketch below and must be specified at the time of order.

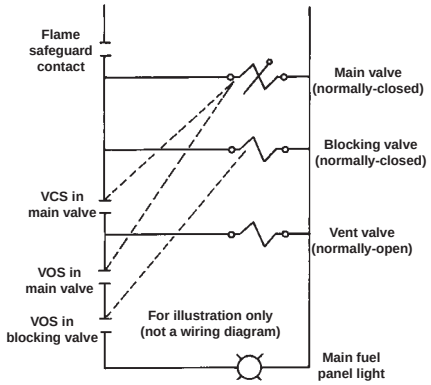

Table 1: Allowable valve spacing for tandem arrgt.		
Valve size	Minimum C-C	Maximum C-C
1” - 1.25”	18”	24”

1) Tandem main valve
2) Tandem blocking valve
3) Tension spring
4) Piping by others
5) Flow
6) Tandem overhead valve
7) Specify loop length if overhead wheel & chain option
8) See Table 1 above

Tandem arrangement

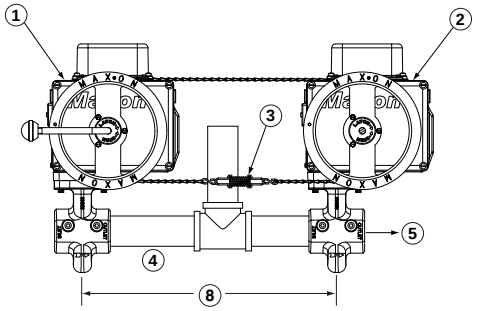

Tandem arrangement with overhead wheel & chain

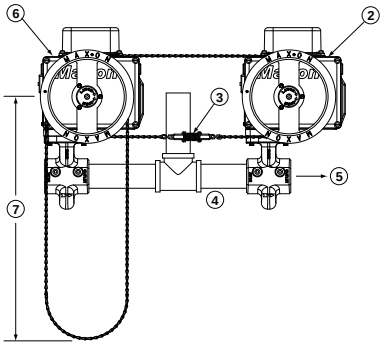

Overhead wheel & chain assembly

Overhead wheel and chain assembly allows operation of a manual reset valve in an otherwise inaccessible overhead location. A wheel is mounted onto the handle of the valve. The attached chain is weighted on one end and has a paddle handgrip on the other.

Once the valve is electrically energized, pulling down on the paddle will open normally closed versions.

Maxon valve's free-handle design permits valve to trip to its rest position on any power interruption.

Wheel and chain assembly includes a length of chain to position the paddle handgrip slightly below pipe centerline. A standard length of 5 feet of chain is included with the valve. Extra chain (in one foot increments) may be specified to fit your specific location.

Approximate envelope dimensions (nominal, in inches)

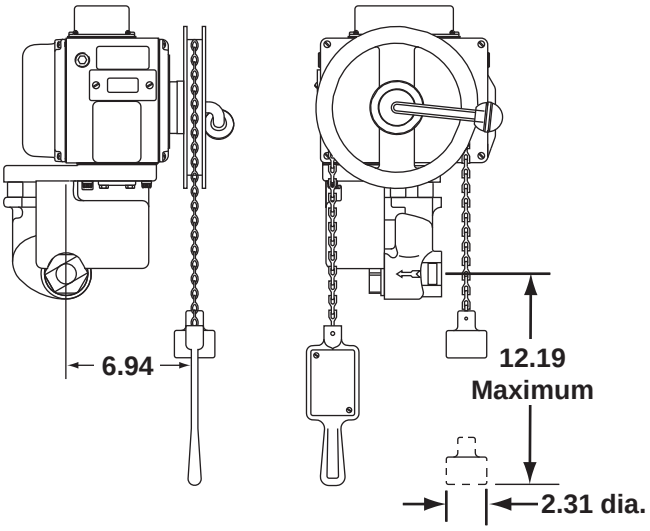

NOTE: Overhead wheel & chain can only be mounted on swinging gate valves with the top assembly position “TO”.

Installation instructions

1. **Read complete instructions** before proceeding and do not discard packing materials until any/all loose items are located. Also, make sure that the installation of the Maxon valves will be in compliance with all applicable governmental, insurance and/or agency requirements or codes, such as NFPA-70, National Electric Code, CSA C22.1, Canadian Electric Code, etc.

2. General considerations:

- Prior to shipment, each valve is operated electrically and cycled at rated and 1-1/2 rated pressure while being leak tested. **Every Maxon valve is operationally tested and meets the requirements of FCI 70-2 Class VI Seat Leakage when it leaves our plant.**
- **Inspect your valve** for any shipping damage. Contact Maxon Corporation with the valve's serial number (printed on the valve's nameplate) for replacement and/or repair parts.
- **Read the nameplate on your valve.** This gives the maximum pressure, temperature limitation, voltage requirements and service conditions of your specific valve. **DO NOT exceed nameplate ratings.**
- **Select mounting location carefully.** Your Maxon valve is designed to operate for many years if installed in a location that is cool, clean and dry.

3. **Pipe the valve** in the direction of the flow arrow on the valve body. The Maxon valve body can shut off flow in one direction only.

- **Remove all thread and flange protectors** before installing valve in your service line.
- **Teflon tape** acts as a lubricant and greatly reduces the pipe wrench turning force required to seal the threads.

Take care not to overtighten threads as this can damage the valve.

- **Good piping practice** dictates that piping be independently supported, so that valve bodies are not placed in a bind. In addition, large valves may require support.
- **Clean pipe lines** of foreign materials before installing valve into line.

For new installations, a gas filter or strainer shall be installed in the fuel gas piping to protect the downstream safety shut-off valves.

per NFPA 86-4-2.4.3 (1999)
NFPA 86C-4-2.4.3 (1999)
NFPA 86D-4-2.4-3 (1999)

If normal inlet pressure to the fuel pressure regulator immediately upstream from the valve exceeds the valve's pressure rating, a relief valve shall be provided and it shall be vented to a safe location.

per NFPA 86-5-7.1.7 (1999)
NFPA 86C-5-7.1.7 (1999)
NFPA 86D-5-7.1.7 (1999)

- **Mount valve** so that open/shut window indicator **[1]** will be visible to your operating personnel. **The open/shut window indicator should never face downward.** With Maxon electro-mechanical top assemblies, the motor access side plate **[2]** should always be vertical to the ground. Valves are usually installed in horizontal piping; however, other orientations are acceptable, subject to the above limitations. The top assemblies of all Maxon valves are field rotatable to allow installations involving conflicts with these mounting restrictions.
- **Main system shut-off** should always use a manual leak-tight upstream fuel cock.
- **Time lag** between valve action and fluid flow (or flame response) is reduced if valve is located near the burner (or outlet).

4. **Wire the valve** in accordance with **all** applicable codes and standards. Supply voltages must agree with valve's nameplate voltage within -15%/+10% AC or DC for proper operation. For electrical wiring schematics, refer to appropriate Maxon catalog literature and/or the wiring schematic diagram affixed inside your valve's access cover plate or in the terminal block cover housing.

- **The Maxon valve must be electrically interlocked** with your safety-limit devices in accordance with all applicable codes, standards, and the authority having jurisdiction over the safety requirements for your overall system installation. Normally, Maxon valves are electrically wired in series with all of your safety-limit devices. Therefore, any one device can cause the valve to react. Each valve was production tested when manufactured. If it now appears inoperative, make sure it is being powered properly from and through your control circuit.
- **Maintain integrity of Maxon top assembly** enclosure by using dust and water-tight electrical connectors. Use cable-sealing grips and strain-relief loops for any cord or cable. Use internal sealing materials on all conduit connections. Moisture can have a harmful effect on valve internals if permitted to enter through wiring connectors. Make sure that all access cover plates are in place and securely fastened. All cover screws should be tightened using an alternate cross corner tightening pattern to the values shown below.

Cover	Torque (in-lbs)
#10-24 Operator cover	25
.25" -20 All other access covers	50
.25"-20 Extended access cover plate	96

- While all covers are torqued at time of production testing, torque should be rechecked periodically to ensure adequate sealing protection.

Pre-operational exercising:

5. Prior to initial fluid flow start-up and with upstream manual cock still closed, operate the valve electrically for 10-15 cycles. This not only provides an electrical check, but also wipes valve body disc and seat free of accumulated foreign matter.

Top assembly rotation

Maxon valves can and should be ordered in a configuration compatible with planned piping, but if open/shut indicator window is not visible and/or valve orientation is not proper, the top assembly can be rotated in 90° increments around the valve body centerline axis by the following procedure:

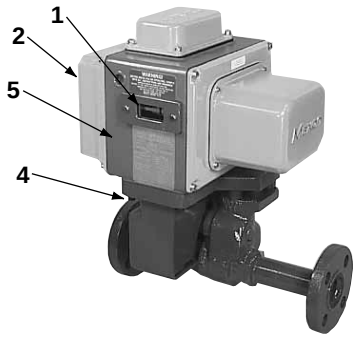

1. **Shut off all electrical power** and close off upstream manual cock.
2. **Remove wiring access cover plate [2]** and disconnect power lead wires. (Tag carefully for later re-assembly.)
3. **Remove conduit and** electrical leads.
4. **Note physical position** of any signal switch actuator wands on auxiliary signal switches (see switch arrangement sketch).
5. Unscrew the two body bolts [4] screwed up from the bottom to 1/4 inch. DO NOT completely remove. These bolts secure the valve body [3] to the valve's top assembly housing [5].
6. **Gently lift the top assembly** [5] **(not more than 1/4" in height)**; just enough to break the seal between the valve body assembly and the rubber gasket adhering to the bottom of the top housing.

WARNING: LIFTING TOO FAR MAY DISLODGE SOME SMALL PARTS INSIDE THE TOP HOUSING, REQUIRING COMPLEX RE-ASSEMBLY AND RETESTING BY TRAINED FACTORY PERSONNEL.

7. Remove the two body bolts [4] screwed up from the bottom (were partially unscrewed in step 5).
8. **Carefully rotate top assembly** to the desired position in a plane parallel to the top of the valve body casting. **Rotate the top housing about 30° beyond this position, and then rotate it back.** Reposition the top housing back down onto the valve body casting. This should align the open/shut indicator with its window and provide proper alignment of the internal mechanism.
9. **Realign holes** in valve body casting with the corresponding tapped holes in the bottom of the top assembly housing. Be sure the gasket is still in place between the body and top housing.
10. **Reinsert the body bolts** up from the bottom through the body and carefully engage threads of the top assembly. Tighten securely.
11. **Reconnect conduit and electrical leads,** then check that signal switch wands are properly positioned and that open/shut indicator moves freely. **Failure to correct any such misalignment can result in extensive damage to the internal mechanism of your valve.**
12. **Energize valve and cycle several times** from closed to full open position. Also electrically trip the valve in a partially opened position to prove valve operates properly.
13. **Replace and secure side cover access plate** and place valve in service.

Cover	Torque
#10-24 Operator cover	25 in-lbs
.25"-20 All other access covers	50 in-lbs
.25"-20 Extended access cover plate	96 in-lbs

Alternate top assembly positions

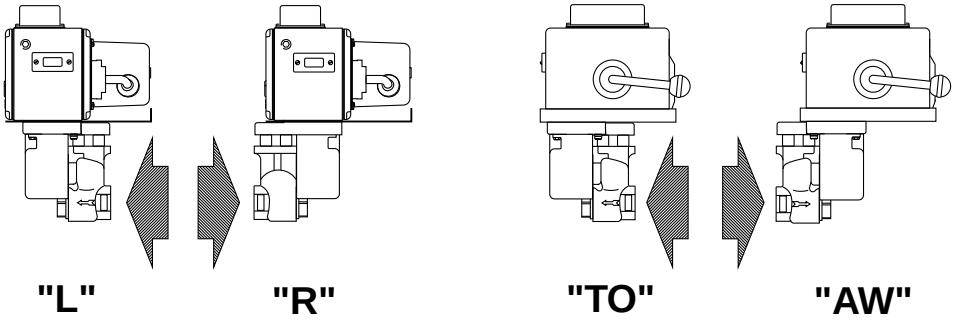

Two top assembly positions are available for Maxon swinging gate valves. When looking at the open/shut window indicator of an electro-mechanical valve assembly, the motor (for motorized version), or the operating handle (for manual version), will be on the right side of the top assembly. The valve body is on the bottom. From this view, the unidirectional valve body and the arrow on the valve body casting points in direction of fluid flow: to the right (position "R"), to the left (position “L”), away from you (position “AW”) or towards you (position "TO").

Operating instructions

Refer to appropriate catalog bulletin and specification page for operating sequence applying to your specific valve. **Never operate valve until all essential allied equipment is operative and any necessary purges completed.** Failure of electro-mechanically operated valve to operate normally indicates that it is **not** powered. **Check this first!** Then check internal holding solenoid and/or motor operator.

Main system shut-off should always be accomplished with an upstream leak-tight manual fuel cock.

All Maxon valves react within a fraction of a second when de-energized. One cycle drop in electrically supplied power can cause this reaction.

All electro-mechanical manual reset valves may be operated manually when solenoid is electrically energized, but electrical tripping is recommended for normal shut-downs.

Electro-mechanical manual reset valves require two positive actions to open: a half rotation of handle to latch internal mechanism, and a reversed half rotation of handle to open valve. This refers to normally closed valves.

Remotely located manual reset valves may be equipped with wheel-and-chain assembly. Instructions to operate the valve are on hand grip. Locate counter-weight overhead at pipe level and hand grip can be brought down to convenient operating personnel height.

Normally closed motorized valves begin opening cycle immediately upon being powered; motor runs only until full open position is reached.

Operator should be aware of and observe characteristic opening/closing action of the valve. Should operation ever become sluggish, remove valve from service and contact Maxon for recommendations.

Address inquiries to: Maxon Corporation, P.O. Box 2068, Muncie, IN 47307

Phone (765) 284-3304; FAX (765) 286-8394; www.maxoncorp.com

Always include valve serial number and nameplate information to insure positive identification.

Maintenance instructions

Maxon valves are endurance tested far in excess of the most stringent requirements of the various approval agencies. They are designed for long life even if frequently cycled, and to be as maintenance-free and trouble-free as possible.

Every Maxon valve is operationally tested and meets the requirements of FCI 70-2 Class VI Seat Leakage when it leaves our plant.

Top assembly components require no field lubrication and should **never** be oiled.

Auxiliary switches, motors and solenoids, may be replaced in the field.

WARNING: Do not attempt field repair of valve body, top assembly or motor drive unit. Any alterations void all warranties.

Valve leak test, performed with valve in line as prescribed by jurisdictional authorities, is strongly encouraged and should be done on a regularly scheduled basis. In rare instances where valve shows leakage, perform **Pre-Operational Exercising** (see below) and retest. If leakage does not stop, remove valve from service.

Pre-operational exercising: Prior to initial fluid flow start-up and with upstream manual cock still closed, operate the valve electrically for 10-15 cycles. This not only provides an electrical check, but also wipes valve body disc and seat free of accumulated foreign matter.

Maxon valves are designed to be used with clean fluids. If foreign material is present in the fuel line, it will be necessary to inspect the valve to make certain it is operating properly. If abnormal opening or closing is observed, the valve should be removed from service. Contact your Maxon representative for instructions.

Insurance authorities agree . . .

. . . that the safety of any industrial fuel burning installation is dependent upon well-trained operators who are able to follow instructions and to react properly in cases of emergency. Their knowledge of, and training on, the specific installation are both vital to safe operation.

Safety controls may get out of order without the operator becoming aware of it unless shutdowns result. Production-minded operators have been known to bypass faulty controls without reporting the trouble.

Continued safe operation of any installation is then assured only if the plant management carefully develops an exact schedule for regular periodic inspection of all safety controls, insisting that it then be rigidly adhered to.

A main gas shut-off cock should be located upstream from all other fuel train piping components and used to shut off all flow of fuel for servicing and other shutdowns.

All safety devices should be tested at least monthly and more often if deemed advisable. Periodic testing for tightness of manual or motorized shut-off valve closure is equally essential.*

**per NFPA 86-Appendix B-4 (1995)*

Operator should be aware of and observe characteristic opening/closing action of the valve. Should operation ever become sluggish, remove valve from service and contact Maxon for recommendations.

Address inquiries to: Maxon Corporation, P.O. Box 2068, Muncie, IN 47307

Phone (765) 284-3304; FAX (765) 286-8394; www.maxoncorp.com

Always include valve serial number and nameplate information to insure positive identification.

Auxiliary signal switches

Field installation instructions

General

Shut off fuel supply upstream of valve, then de-energize valve electrically.

- Remove top or side cover to provide access, being careful not to damage gasket.

To replace existing switches

Note wand position and mounting hole location carefully, then remove 2 screws and lift existing switch.

- Install replacement switch in same mounting holes on bracket and verify correct wand position.
- Replace existing wiring one connection at a time, following original route and placement.

To add switches to existing valve

- Mount switches to bracket using the mounting holes appropriate for valve type and size.
- Position bracket so VCS wand just touches top of actuator, then move downward slightly, depressing wand until switch clicks, then tighten mounting screws to hold this position.
- Pin bracket by drilling 1/8" dia. holes 1/4" deep into bracket mounting pad through drive pin holes, then tap drive pin in until flush.
- Route wires to wiring compartment as shown, then complete wiring connections and clean out metal drilling chips from previous procedure.
- Cycle valve, checking switch actuation points carefully. (VCS actuates at top of stem stroke, VOS at bottom.) Simultaneously the valve body must be tested for switch continuity and seat leakage. Bend VOS switch wands slightly if necessary to insure valve is opening fully.
- Replace gasket and cover, then return valve to service.

Electrical data

Manual reset series:
1” - 1.25” Series 730NI, 760NI (-S)

Automatic reset series:
1” - 1.25” Series 4730NI, 4760NI (-S)

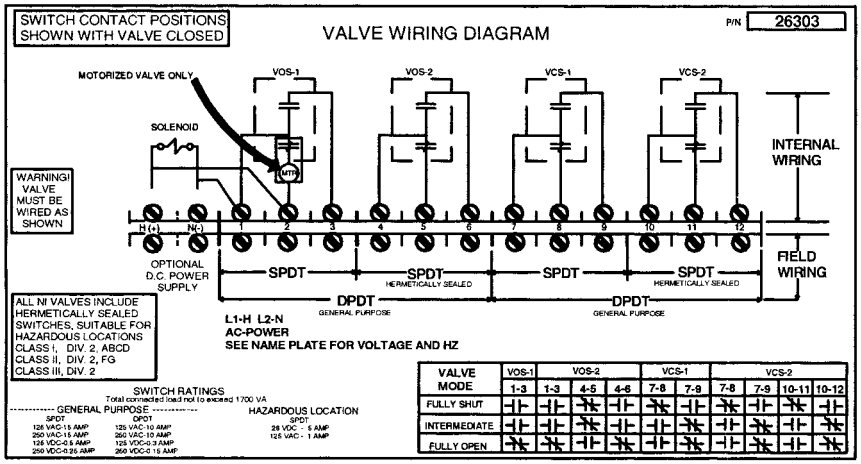

Tandem arrangements (for simultaneous opening of main and blocking valves)

Installation instructions

Review and comply with all general valve installation instructions provided separately. (See sketch below.)

1. Mount both valves in fuel line with center to center spacing as originally specified, and blocking valve (without handle) downstream of main valve (with handle).
2. Check valve alignment to be certain that operating wheels lie in the same plane.
3. Remove tape from the wheel of the main valve and unwind the attached chain. Do not remove the screw holding chain to wheel; it has been factory positioned to assure correct alignment. Do not remove tension spring attached to one end of chain or the wooden block insert which preloads the spring.
4. Take free end of chain and loop it around the wheels of both main and blocking valve as shown in sketch below. Depending on the specific valve series and arrangement, tension spring may be located either above or below the wheel center-line.
5. Draw free end of chain and tension spring together so that as much slack as possible is eliminated, then insert the open eye of the spring "S" hook through the link in the chain that will most nearly maintain this position.
6. Crimp the "S" hook shut around the chain link, then cut and discard excess chain.
7. Remove spring preload wood block insert from the tension spring, and verify that the chain is drawn tight.
8. Rotate the operating handle of the main valve fully to latching position for your particular valve, then hold handle firmly in this position while performing the next few steps.
9. Rotate blocking valve wheel fully counter-clockwise until it strikes a stop (it will slide within the loop of chain).
10. Still holding main valve wheel in place, move blocking valve wheel approximately 1/4 to 1/2 inch back in the clockwise direction. Insert the #10-24 X 1/2" screw (furnished) through the chain link that lines up with the tapped hole on bottom of blocking valve wheel, then fasten securely.
11. Verify that the valves are wired in parallel as shown on page 10-30.2.1-14.

To add wheel & chain assembly to existing tandem valves

1. Verify that both valves are in the same top assembly position (TO or AW). Rotate if necessary. (See top assembly rotation instructions on page 10-30.2.1-19.)
2. Bend handle of main valve outward about 25°.
3. Cut off handle of blocking valve at outer wheel face.
4. Remove hardware holding main valve wheel in place and mount new wheel and spacer to the existing wheel with new hardware provided.
5. Cut chain loop to the desired length and secure to both wheels.

1) Tandem main valve
2) Tandem blocking valve
3) Tension spring
4) Piping by others
5) Flow direction

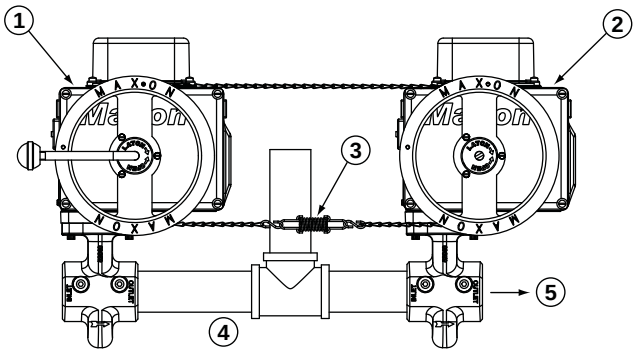

Overhead wheel & chain assembly

Overhead wheel and chain assembly allows operation of a manual reset valve in an otherwise inaccessible overhead location. A wheel is mounted onto the handle of the valve. The attached chain is weighted on one end and has a paddle handgrip on the other.

Once the valve is electrically energized, pulling down on the paddle will open normally closed versions.

Maxon valve's free-handle design permits valve to trip to its rest position on any power interruption.

Wheel and chain assembly includes a length of chain to position the paddle handgrip slightly below pipe centerline. A standard length of 5 feet of chain is included with the valve. Extra chain (in one foot increments) may be specified to fit your specific location.

Approximate envelope dimensions (nominal, in inches)

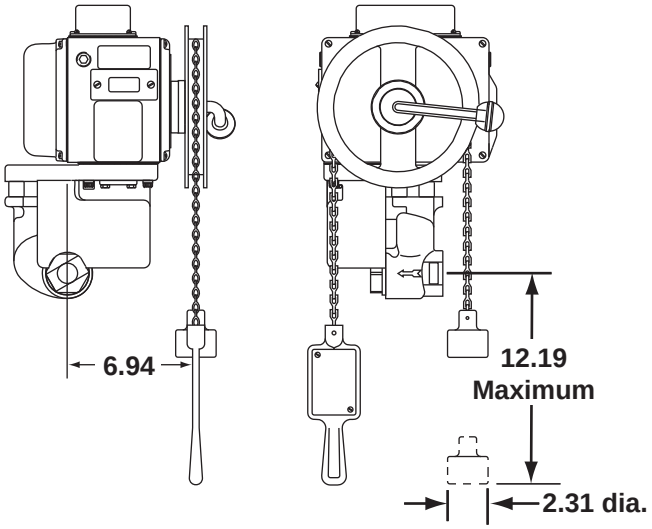

NOTE: Overhead wheel & chain can only be mounted on swinging gate valves with the top assembly position “TO”.

Maintenance instructions

MAXON electro-mechanical valves are endurance tested far in excess of the most stringent requirements of the various approval agencies. They are designed for long life even if frequently cycled, and to be as maintenance-free and trouble-free as possible. A valve operational test should be performed on an annual basis. If abnormal opening or closing is observed, the valve should be removed from service and your MAXON representative should be contacted. (See MAXON Technical Document 10-35.1.)

Valve leak test should be performed on an annual basis to assure continued safe and reliable operation. Every MAXON valve is operationally tested and meets the requirements of FCI 70-2 Class VI Seat Leakage when in good operable condition. Zero leakage may not be obtained in the field after it has been in service. For specific recommendations on leak test procedures, see MAXON Technical Document 10-35.2. Any valve that exceeds the allowable leakage, as set forth by your local codes or insurance requirements should be removed from service and your MAXON representative should be contacted.

Actuator assembly components require no field lubrication and should never be oiled.

Auxiliary switches, solenoids, motors, clutches or circuit boards may be replaced in the field.

Do not attempt field repair of valve body or actuator. Any alterations void all warranties and can create potentially hazardous situations.

If foreign material or corrosive substances are present in the fuel line, it will be necessary to inspect the valve to make certain it is operating properly. If abnormal opening or closing is observed, the valve should be removed from service. Contact your MAXON representative for instructions.

Operator should be aware of and observe characteristic opening/closing action of the valve. Should operation ever become sluggish, remove valve from service and contact MAXON for recommendations.

Address inquiries to MAXON. Local worldwide offices may be located at www.maxoncorp.com. Include valve serial number and nameplate information.