SAFETY WITHOUT COMPROMISE

SERIES 830E-D

End-of-Line Conservation Vent & Flame Arrester

Suitable for use with Explosion Group IIA (NEC Group D) Vapors

PROTECTOSEAL

- Sizes DN 50 (2") through DN 150 (6")
- Conforms to the latest ATEX Directive, ISO 16852
- Suitable for use with Explosive Group IIA (NEC Group D)
- Settings achieved by weight loading
- Operating temperatures up to +60°C (140°F)
- Extremely low leakage rates prior to set point
- Patented, FEP film "Air-Cushioned Seating"
- Low-leak pallet design - certified test reports
- Factory tested / certified for leakage and correct settings
- Available in Aluminum, Ductile Iron and Stainless Steel

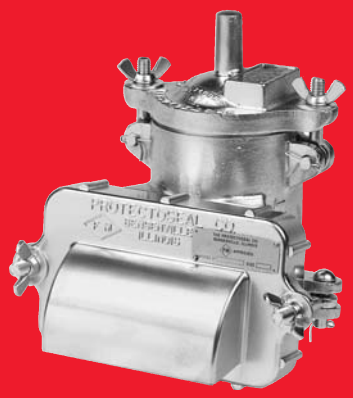

SERIES 830E-D

OBJECTIVE

The Protectoseal Series No. 830E-D Combination Conservation Vent and Flame Arresters are designed to provide pressure and vacuum relief to maintain tank's vapor space within safe operating parameters. Vent settings minimize loss of product. Under pressure venting conditions, tank vapors are expelled to atmosphere. Also serves as an End-of-Line Flame Arrester to protect tank's vapor space from external sources of ignition. Maximum operating pressure is 1.1 bara (15.9 PSIA). The Series 830E-D Combination Vent / Flame Arresters are intended for use with vapors equivalent to IEC Explosion Group IIA (NEC Group D). Arresters are not for use in stabilized burning situations.

TECHNIQUE

Pallets in vent housing minimize air and vapor loss as the tank "breathes". They open and close just enough to maintain safe working pressures and avoid damage to the tank. An integral flame arrester protects tank contents against fire and explosion caused by exterior sources of ignition. Rectangular plate-type flame arrester element(s) are mounted external to pallet assemblies for ease of use and are only exposed to vapors when venting.

Guided pallet assemblies insure proper alignment on the seat and smooth lifting and reseating action.

Optimized Performance Vents™

Protectoseal's "Optimized Performance Vents" incorporate patented features that provide the optimum overall vent performance with regard to sealing, set point, flow and resealing (blow down).

SPECIAL FEATURES

Fast Inspection, Easy Maintenance. "Swing bolt design" permits removal of the vent housing cover and/or weatherhood(s) for easy, convenient handling for inspection and maintenance.

Maintains Accurate Pressure Settings. Set points are accurate to within +/- 3% across the entire range of available settings. Units may be weight loaded for use on installations requiring higher settings.

Air-Cushioned Seating. A flat, smooth diaphragm of FEP film is supported on both sides of an annular channel to form a floating air seal with the seat. An outer support rim assures proper seating.

Low-Leakage. Vent leakage is no more than 1 SCFH at 90% of the set pressure.

Automatic Condensate Drainage. Vertically mounted, rectangular plate-type flame arrester is employed for self-drainage of condensate. Grids are mounted externally and are only exposed to vapors when venting.

Positive Flame Arresting. Correct air spacing between the individual plates is assured through a series of precision embossings on the face of each plate. Each plate is fabricated from heavy gauge metal to resist distortion during cleaning and reassembly.

Sizes Available. DN 50 (2"), DN 80 (3"), DN 100 (4") and DN 150 (6"). Please refer to dimension chart on reverse for flange connection options.

Test Lab Listings. Conforms to the latest ATEX Directive, ISO 16852. Refer to Protectoseal Series 830 for Factory Mutual (FM) or Underwriters Laboratories (UL) arresters.

PRO-FLOW ® Sizing and Selection Software. Use PRO-FLOW ® to select the correct size unit for pressure and vacuum relief calculated in accordance with API 2000, ISO 28300, NFPA 30 and OSHA 1910.106.

Quality Assurance. Each unit is factory tested for leakage and correct settings to meet Protectoseal's high standards prior to shipment.

CONSTRUCTION

A comprehensive range of materials is offered as shown in the chart below. Other materials and features can be furnished upon request.

Available Options.

- ➤ Alternate diaphragm materials
- ➤ Material certifications for castings
- ➤ Lower than standard minimum pressure and /or vacuum setting

Series	Housing	Pallet	Pallet Diaphragm	Nipple/ Flange	Arrester Grid Assy.
A830E_ _-D	Aluminum	316 S.S.	FEP Film	Aluminum	316 S.S.
B830E_ _-D	Aluminum	Aluminum	FEP Film	Aluminum	Aluminum
C830E_ _-D	Ductile Iron	316 S.S.	FEP Film	Steel	316 S.S.
F830E_ _-D	316 S.S.	316 S.S.	FEP Film	316 S.S.	316 S.S.

Note: Please refer to charts on reverse for ordering options.

SERIES 830E-D PART NUMBERING SYSTEM

DN 50 (2"), DN 80 (3") & DN 100 (4") Sizes

DIGIT #:		1	2	3	4	5	6	7	8	9
1	Material:	A	Aluminum Body, 316 S.S. Element/Pallet Assemblies							
		B	Aluminum Body, Element/Pallet Assemblies							
		C	Ductile Iron Body, 316 S.S. Element/Pallet Assemblies							
		F	316 S.S. Body, Element/Pallet Assemblies							
2 & 3	Series No.	83	End-of-Line Combination Vent & Flame Arrester							
4	Size	2	DN 50 (2")							
		3	DN 80 (3")							
		4	DN 100 (4")							
5	Type	E								
6	Connection	1	FNPT							
		2	ANSI 125# FF Flange *(Aluminum)*							
		2	ANSI 150# RF Flange *(Other Materials)*							
		3	DIN PN 16 FF Flange *(Aluminum)*							
		3	DIN PN 16 RF Flange *(Other Materials)*							
7	Flange / Nipple	0	None (FNPT Connection)							
		1	When Material Code is "A" or "B" *(Aluminum)*							
		1	When Material Code is "F" *(316 S.S)*							
		2	When Material Code is "C" *(Steel)*							
8		-								
9	Vapor Group	D	Explosion Group IIA (NEC Group D)							

DN 150 (6") Size

DIGIT #:		1	2	3	4	5	6	7	8
1	Material:	A	Aluminum Body, 316 S.S. Element/Pallet Assemblies						
		F	316 S.S. Body, Element/Pallet Assemblies						
2 & 3	Series No.	83	End-of-Line Combination Vent & Flame Arrester						
4	Size	6	DN 150 (6")						
5	Type	E							
6	Connection	1	ANSI 125# FF Flange *(Aluminum)*						
		1	ANSI 150# RF Flange *(Other Materials)*						
		2	DIN PN 16 FF Flange *(Aluminum)*						
		2	DIN PN 16 RF Flange *(Other Materials)*						
7		-							
8	Vapor Group	D	Explosion Group IIA (NEC Group D)						

PART NO. EXAMPLE:

DIGIT #:	1	2	3	4	5	6	7	8
	F	8	3	2	E	3	-	D

Description: Body, Element & Pallet Assemblies - 316 S.S.
Size - DN 50 (2")
Connection - DIN PN 16 RF Flange
Flange / Nipple - 316 S.S.
Vapor Group IIA (NEC Group D)

DIMENSIONS *(Please refer to numbering system above to complete Part No. NOTE: Dimensions shown are for reference only, contact Factory for certified drawings.)*

Part No.	Connection - K FNPT	ANSI	DIN 16 PN	Ht A	Dia C	B.C D	Dia. E	Holes N
[1] 832E10-D	2"	-	-	320mm *(12.63")*	257mm *(10.13")*	-	-	-
[1] 832E2 [7]-D	-	2"	-	371mm *(14.63")*	257mm *(10.13")*	120mm *(4.75")*	19mm *(.75")*	4
[1] 832E3 [7]-D	-	-	DN 50	371mm *(14.63")*	257mm *(10.13")*	125mm *(4.94")*	18mm *(.72")*	4
[1] 833E10-D	3"	-	-	376mm *(14.81")*	397mm *(15.63")*	-	-	-
[1] 833E2 [7]-D	-	3"	-	432mm *(17")*	397mm *(15.63")*	152mm *(6")*	19mm *(.75")*	4
[1] 833E3 [7]-D	-	-	DN 80	432mm *(17")*	397mm *(15.63")*	160mm *(9.28")*	18mm *(.72")*	8
[1] 834E10-D	4"	-	-	400mm *(15.75")*	489mm *(19.25")*	-	-	-
[1] 834E2 [7]-D	-	4"	-	470mm *(18.5")*	489mm *(19.25")*	190mm *(7.5")*	19mm *(.75")*	8
[1] 834E3 [7]-D	-	-	DN 100	470mm *(18.5")*	489mm *(19.25")*	180mm *(7.09")*	18mm *(.72")*	8
[1] 836E1-D	-	6"	-	457mm *(18")*	628mm *(24.75")*	240mm *(9.5")*	22mm *(.87")*	8
[1] 836E2-D	-	-	DN 150	457mm *(18")*	628mm *(24.75")*	240mm *(9.5")*	22mm *(.87")*	8

Superscripted numbers refer to digits as indicated in the "Part Numbering System" chart.

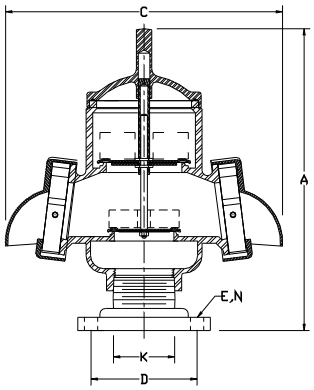

NOTE: 2" & 6" sizes have a single flame arrester. 3" & 4" sizes have two arresters.

PRESSURE AND/OR VACUUM SETTINGS *(Consult factory for settings outside of STANDARD range.)*

Connection Size	STANDARD MINIMUM SETTINGS PRESSURE & VACUUM Aluminum oz./in.²	in.W.C.	kPa	Other Materials oz./in.²	in.W.C.	kPa	STANDARD MAXIMUM SETTINGS PRESSURE All Materials oz./in.²	in.W.C.	kPa	VACUUM All Materials oz./in.²	in.W.C.	kPa
2" / DN 50	0.50	0.87	0.21	0.75	1.30	0.32	16.00	27.68	6.89	8.00	13.84	3.45
3" / DN 80	0.50	0.87	0.21	0.75	1.30	0.32	16.00	27.68	6.89	8.00	13.84	3.45
4" / DN 100	0.50	0.87	0.21	0.75	1.30	0.32	16.00	27.68	6.89	8.00	13.84	3.45
6" / DN 150	-	-	-	0.75	1.30	0.32	13.80	23.87	5.95	8.50	14.71	3.66

Distributed by: relevant. 888.858.3647 | relevantsolutions.com

PROTECTOSEAL® Safety Without Compromise
225 Foster Ave., Bensenville, IL 60106-1690
P 630.595.0800 F 630.595.8059
info@protectoseal.com www.protectoseal.com

©2016 The Protectoseal Company