ELECTRONIC PRESSURE MEASUREMENT PRODUCTS

Model 831 Pressure Transmitter

DESCRIPTION

The Model 831 transmitters are the most durable, accurate and cost-effective fixed range pressure transmitter available. An all 316 stainless steel transmitter, it is designed for years of stable performance in even the toughest environmental and corrosive media conditions. With its all-welded construction, this transmitter is weatherproof and capable of a direct spray with forces up to 200 psi without internal leakage. The Model 831 (standard and low power) has FM and CSA explosion-proof ratings. The 831D (differential pressure) also carries the CSA explosion-proof rating. All Model 831s meet NACE standards for offshore applications. A one year warranty is standard with every unit.

The small size and light weight of the Model 831 transmitter eliminates the need for complicated mounting hardware and mechanical supports, thereby substantially reducing installation time. The in-line connection permits simple field wiring without the need for additional hardware, adding to the speed and ease of installation.

The standard Model 831 and the Model 831D feature a 4 to 20 mA output standard with a 12 to 30 VDC power supply. The Model 831 Low Power provides a three wire 1-5 or 0.8-3.2 voltage output and requires less than 30 milliwatts of total power to operate. The combination of low power requirement, small size, excellent performance and low price make the Model 831 Low Power transmitter ideal for critical outdoor applications on battery or solar power. This model requires 6 or 8-14 VDC excitation and is available in pressure ranges from 6 to 5000 psi.

FEATURES

- Available in differential pressure, low power or standard version
- All welded 316L stainless steel construction and wetted parts
- 3/4 inch NPT female conduit connection cable
- 1/2 inch NPT female pressure port, 1/2 inch NPT male, 1/4 inch NPT male
- 24 inch cable length standard
- All models are CSA approved, explosion proof, and meet NACE standards for off-shore applications
- The low power and standard versions are FM approved with the explosion proof rating

PRODUCT FEATURES

Model 831 Standard

- Available in pressure ranges from 6 psig to 5000 psig
- Rugged construction
- Available with conduit adapter
- Optional EMI protection

Model 831 Low Power

- Available in pressure ranges from 6 psig to 5000 psig
- 8 to 14 or 6 to 14 VDC with reverse polarity protection
- Perfect for solar or battery applications
- Current draw <3 mA
- Optional EMI protection

Model 831D

- Measures differential pressure
- Available in pressure ranges from 6 psid to 500 psid

Models 831, 831 Low Power and 831D Differential Pressure Transmitters

with various output options

Distributed by Relevant Solutions | 1.888.858.3647 | relevantsolutions.com

AMETEK®
Sales/Technical Support Telephone: +1 215-355-6900 or e-mail: pmt.sales@ametek.com
820 Pennsylvania Boulevard | Feasterville, PA 19053 U.S.A. | Order Fax: +1 215-354-1802

© 2013, by AMETEK, Inc. All rights reserved. Printed in the U.S.A. K796379 – Effective: 4-2013, Supersedes: New (110111)
Specifications are subject to change without notice. Visit our Web site for the most up-to-date information.

ISO 9001:2000 CERTIFIED

www.ametekpmt.com

ELECTRONIC PRESSURE MEASUREMENT PRODUCTS

Model 831 Pressure Transmitter

	Model 831 Low Power Fixed Range Pressure Transmitter	Model 831 Standard (4-20 mA) Fixed Range Pressure Transmitter	Model 831D Differential Pressure Fixed Range Transmitter
Specifications:			
Functional Specification Service	Liquid, gas or vapor	Liquid, gas or vapor	Liquid, gas or vapor
Standard Pressure Ranges*	0 to 6 psig (0 to 0.41bar) to 0 to 5000 psig (0 to 344.8 bar)*	0 to 6 psig (0 to 0.41bar) to 0 to 5000 psig (0 to 344.8 bar)*	0 to 6 psid (0 to 0.41bar) to 0 to 500 psid (0 to 34.4 bar)*
Output	1-5 VDC or 0.8-3.2 VDC, limited to 14 VDC	4-20 mADC, limited to 30 mADC	4-20 mADC, limited to 30 mADC
Null Offset at 77°F (25°C)	For 1-5 VDC unit ±1% of span. For 0.8-3.2 VDC unit ±2% of span.	4.0 mA ±2% span	4.0 mA ±1% span
Span Offset at 77°F (25°C)	For 1-5 VDC unit ±1% of span. For 0.8-3.2 VDC unit ±2% of span.	16.0 mA ±1% span	16.0 mA ±1% span
Power Supply (Transmitter must be powered by an approved power supply)	8 to 14 or 6 to 14 VDC with reverse polarity protection	12 to 30 VDC with reverse polarity protection	12 to 30 VDC with reverse polarity protection
Loop Resistance (max.) for mA or Load (min.) for VDC	50 kΩ minimum	900 Ω maximum at 30 volts	900 Ω maximum at 30 volts
Temperature Limits:			
Operating and Electronics (Ambient)	-40 to 140°F (-40 to 60°C)	-40 to 140°F (-40 to 60°C)	-40 to 140°F (-40 to 60°C)
Process Interface and Storage	-40 to 212°F (-40 to 100°C)	-40 to 212°F (-40 to 100°C)	-40 to 212°F (-40 to 100°C)
Compensated	-20 to 160°F (-29 to 71°C)	-20 to 160°F (-29 to 71°C)	-20 to 160°F (-29 to 71°C)
Burst Pressure			2500 psig
Overrange Limits	300%	300%	3X FS differential pressure range
Humidity Limits	0-100% RH	0-100% RH	0-100% RH
Accuracy	±0.3% of full scale including linearity (BFSL), hysteresis and repeatability at 25°C and 12VDC	±0.3% of full scale including linearity (BFSL), hysteresis and repeatability at 25°C and 12VDC	±0.5% of full scale including linearity (BFSL), hysteresis and repeatability at 25°C and 12VDC
Stability	<0.5% FS per 6 months	<0.5% FS per 6 months	<0.5% FS per 6 months
Temperature Effect (between -20° and 180°F (-29° and 82°C) Referenced to 77°F (25°C)			
Zero and Span	±2% FS per 50°F (28°C)	±2% FS per 50°F (28°C)	±2% FS per 50°F (28°C)
Vibration Effect	±0.1% of span for 3G to 200 Hz	±0.1% of span for 3G to 200 Hz	±0.1% of span for 3G to 2000 Hz
Overrange Effect	±0.15% FS per 200% of maximum range	±0.15% FS per 200% of maximum range	±0.15% FS per 200% of maximum range
Physical Specifications:			
Process Wetted Parts	316L stainless steel (std) or Hastelloy C276	316L stainless steel (std) or Hastelloy C276	316L stainless steel (std)
Non Wetted Parts	316 stainless steel	316 stainless steel	316 stainless steel
	PVC cable jacket (std)	PVC cable jacket (std)	PVC cable jacket (std)
	Nylon cable strain relief	Nylon cable strain relief	Nylon cable strain relief
	BUNA-N cable seal	BUNA-N cable seal	BUNA-N cable seal
Safety Classifications	CSA (Canada and USA)	CSA (Canada and USA)	CSA (Canada and USA)
	Explosion Proof for Class I, Division 1, Groups B, C, and D; Class II, Groups E, F, and G; Class III, Hazardous Locations and meets CSA requirements for Enclosure 4	Explosion Proof for Class I, Division 1, Groups B, C, and D; Class II, Groups E, F, and G; Class III, Hazardous Locations and meets CSA requirements for Enclosure 4	Explosion Proof for Class I, Div 1, Groups B, C, and D; Class II, Groups E, F, and G; Class III, Hazardous Locations and meets CSA requirements for Enclosure 4
	(Conduit seal must be within 18 inches of transmitter for FM) Max. ambient = 140°F (60°C)	(Conduit seal must be within 18 inches of transmitter for FM) Max. ambient = 140°F (60°C)	(Conduit seal must be within 18 inches of transmitter for FM) Max. ambient = 140°F (60°C)
	Factory Mutual (FM)	Factory Mutual (FM)	NACE
	Explosion Proof for Class I, Division 1, Groups B, C, and D; Class II, Groups E, F, and G; Class III Hazardous Locations Indoor and Outdoor NEMA Type 4 Enclosure	Explosion Proof for Class I, Division 1, Groups B, C, and D; Class II, Groups E, F, and G; Class III Hazardous Locations Indoor and Outdoor NEMA Type 4 Enclosure	
	NACE	NACE	

** Alternate and very low pressure ranges available, consult factory*

Distributed by Relevant Solutions | 1.888.858.3647 | relevantsolutions.com

AMETEK®
Sales/Technical Support Telephone: +1 215-355-6900 or e-mail: pmt.sales@ametek.com
820 Pennsylvania Boulevard | Feasterville, PA 19053 U.S.A. | Order Fax: +1 215-354-1802

© 2013, by AMETEK, Inc. All rights reserved. Printed in the U.S.A. K796379 – Effective: 4-2013, Supersedes: New (110111)
Specifications are subject to change without notice. Visit our Web site for the most up-to-date information.

ISO 9001:2000 CERTIFIED

www.ametekpmt.com

ELECTRONIC PRESSURE MEASUREMENT PRODUCTS

Model 831 Pressure Transmitter

Model Numbering:

831 Pressure Transmitter

831 Pressure transmitter

Process connection

F 1/4 inch NPT male
H 1/2 inch NPT male
T 1/2 inch NPT female

Pressure types

A Absolute
C Compound
D Differential pressure
G Gauge
V Vacuum

Pressure ranges

0006	0 to 6 psi (0 to 0.41 bar)
0015	0 to 15 psi (0 to 1 bar)
0030	0 to 30 psi (0 to 2.1 bar)
0100	0 to 100 psi (0 to 6.9 bar)
0300	0 to 300 psi (0 to 20.7 bar)
1000	0 to 1000 psi (0 to 69.0 bar)
3000	0 to 3000 psi (0 to 206.9 bar)
5000	0 to 5000 psi (0 to 344.8 bar)

Additional ranges available, consult factory

Differential ranges

0006	0 to 6 psid (0 to 0.41 bar)
0015	0 to 15 psid (0 to 1 bar)
0030	0 to 30 psid (0 to 2.1 bar)
0060	0 to 60 psid (0 to 4.1 bar)
0100	0 to 100 psid (0 to 6.9 bar)
0150	0 to 150 psid (0 to 10.3 bar)
0200	0 to 250 psid (0 to 13.8 bar)
0300	0 to 300 psid (0 to 20.7 bar
0500	0 to 500 psid (0 to 34.5 bar)

Input/Output

B 12 to 30 VDC/4 to 20 mA
C 8 to 14 VDC/1 to 5 VDC (low power model)
D 6 to 14 VDC/0.8 to 3.2 VDC (low power model)

Isolation diaphragm material

H 316L process connection, Hastelloy C276 diaphragm
L 316L process connection and diaphragm (standard)

Fill fluid

M Mineral oil – minimum operating temperature limited to 10°F (-12°C)
S DC silicone (standard)

Electrical termination *(for standard PVC cable in 2 feet length, electrical termination and cable length fields can be omitted)*

A PVC (standard)
B PVC/EMI
C TEFLON
D TEFLON/EMI
E-Z Additional cable material/EMI option, consult factory

Cable length

A 2 ft. (standard) *(FM explosion proof requires a conduit seal at 18" max.)*
B 5 ft.
C 10 ft.
D 15 ft.
E 20 ft.
F 25 ft.
G-Z Additional lengths up to 1000 ft., consult factory

831	T	G	0015	B	L	S	A	B

** Consult factory for additional options*

Distributed by Relevant Solutions | 1.888.858.3647 | relevantsolutions.com

AMETEK®
Sales/Technical Support Telephone: +1 215-355-6900 or e-mail: pmt.sales@ametek.com
820 Pennsylvania Boulevard | Feasterville, PA 19053 U.S.A. | Order Fax: +1 215-354-1802

© 2013, by AMETEK, Inc. All rights reserved. Printed in the U.S.A. K796379 – Effective: 4-2013, Supersedes: New (110111)
Specifications are subject to change without notice. Visit our Web site for the most up-to-date information.

ISO 9001:2000 CERTIFIED

www.ametekpmt.com

ELECTRONIC PRESSURE MEASUREMENT PRODUCTS

Model 831 Pressure Transmitter

Standard and Low Power

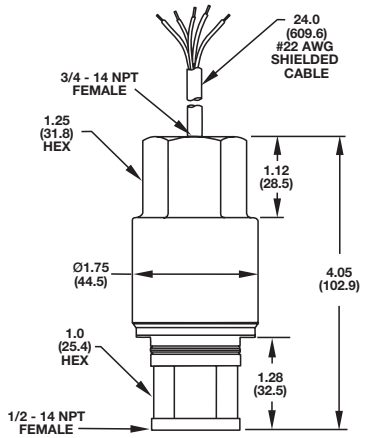

Weight: 0.83 lbs. (376 grams)

INCHES
(MM)

Differential

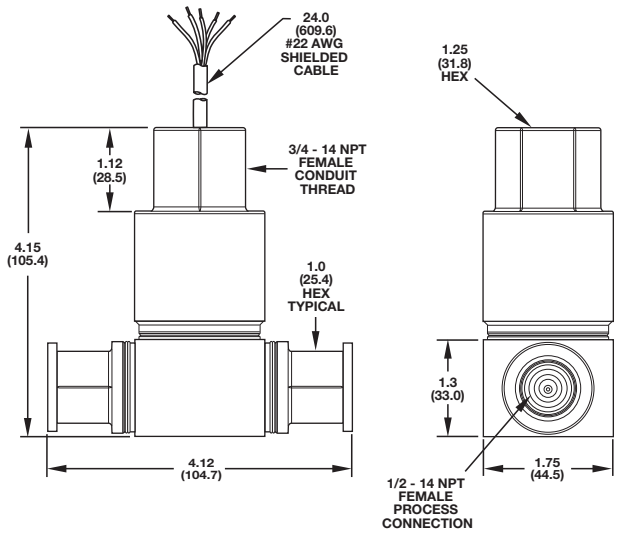

Weight: 1.8 lbs. (816 grams)

Distributed by:

relevant.

Relevant Solutions | 888-858-3647 | relevantsolutions.com

AMETEK®
Sales/Technical Support Telephone: +1 215-355-6900 or e-mail: pmt.sales@ametek.com
820 Pennsylvania Boulevard | Feasterville, PA 19053 U.S.A. | Order Fax: +1 215-354-1802

© 2013, by AMETEK, Inc. All rights reserved. Printed in the U.S.A. K796379 – Effective: 4-2013, Supersedes: New (110111)

Specifications are subject to change without notice. Visit our Web site for the most up-to-date information.

ISO 9001:2000 CERTIFIED

www.ametekpmt.com